HYDRAULIC GEAR PUMPS

Polaris Series - Group 3
Mount : SAE B - 2 Bolt Mount
Shaft : Splined or Keyed
Ports : Threaded BSPP

PLP30 - Group 3

SAE B - 2 Bolt Mount

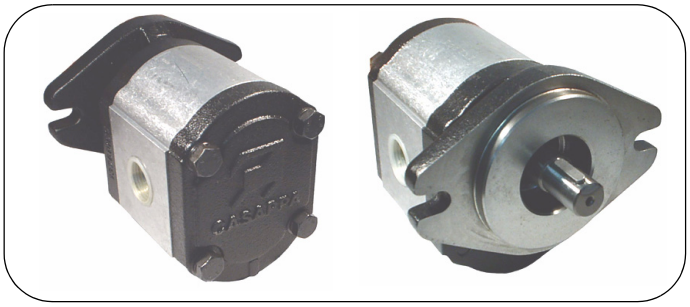

Part No.	DISP. CC/ REV	MAX PRESSURE			MAX SHAFT SPEED	PORTS		DIM MM	
		P1	P2	P3		ADAPTOR			
		BAR PSI				IN	OUT	A	B
PLP30-22D-04S5-GFGF	21.99	250	270	280	3000	1″ (GF)	1″ (GF)	158	92
PLP30-27D-04S5-GFGF	26.70							163	94.5
PLP30-34D-04S5-GFGF	34.55	240	260	270				168	97
PLP30-38D-04S5-GFGF	39.27							173	99.5
PLP30-43D-04S5-GFGF	43.98	230	250	260				174	100
PLP30-51D-04S5-GFGF	51.83	210	230	240	2500			179	102.5
PLP30-61D-04S5-GGGF	61.26	190	210	220		1 1/4″ (GG)	1″ (GF)	185	105.5
PLP30-73D-04S5-GGGF	73.82	170	190	200				193	109.5

p1 = continuous max. pressure p2 = intermittent max. pressure p3 = peak pressure

SERIES

PLP30-43 D- 04 S5 - GFGF

DISPLACEMENT CODE

Rotation Code	Shaft Code	Mount Code	Port Code
D = Clockwise	04 = 7/8″ 13 Tooth 05 = 1″ 15 tooth 32 = 7/8″ Keyed 33 = 1″ keyed	S1 = SAE "A" 2 BOLT	GF = 1″ BSPP
S = Counterclockwise		S5 = SAE "B" 2 BOLT	GG = 1 1/4″ BSPP

NB:the shaft option 33, 1″ keyed requires a special front mount plate 61014990

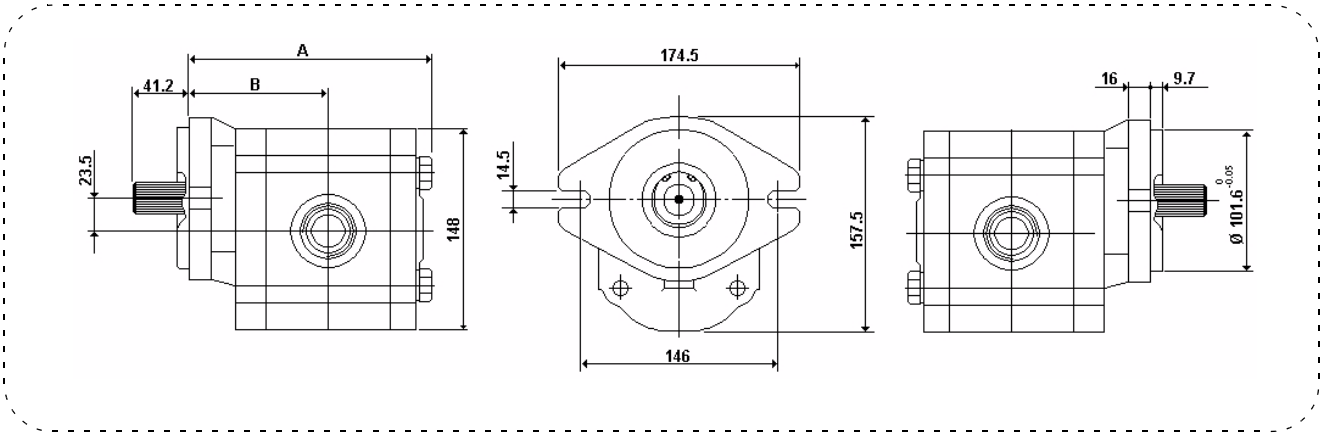

MULTIPLE PUMP PRICING - Same price as single pumps plus assembly kit.